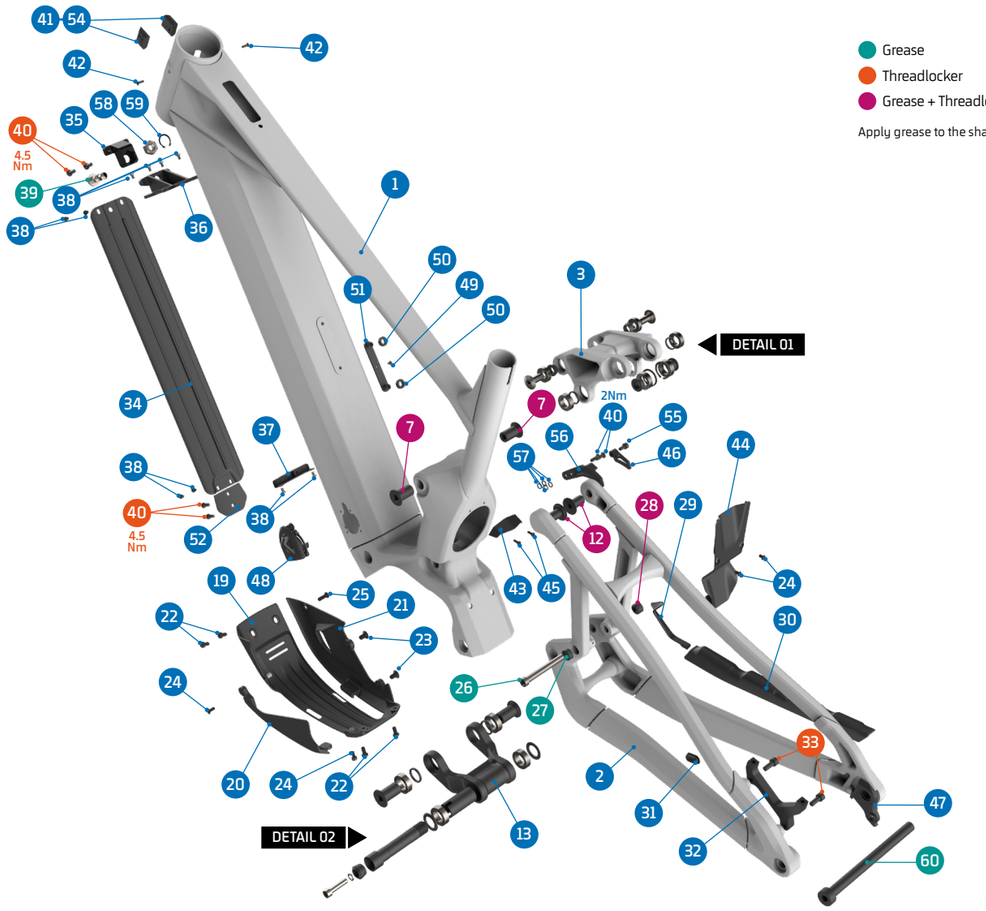

- Grease
- Threadlocker
- Grease + Threadlocker

Apply grease to the shaft, and locker to the threads

ITEM No.	DESCRIPTION	QTY.	PART NUMBER	TORQUE
1	LEVEL FRONT TRIANGLE	1		
2	LEVEL REAR TRIANGLE	1		
3	UPPER LINK	1	099.25036	
4	TRUNNION BOLT	2	SET 2	8Nm
5	BEARING 10X22X6	2	SET 1	
6	TRUNNION SPACER	2	SET 2	
7	PIVOT BOLT	4	SET 3/4	17Nm
8	BEARING 15X24X7	8	SET 1	
9	BEARING SPACER	4	SET 3/4	
10	PIVOT TOP HAT SPACER	2	SET 3	
11	CIRCLIP	2	SET 3	
12	PIVOT BOLT	2	SET 3	17Nm
13	LOWER LINK	1	099.25037	
14	PIVOT COLLET BOLT	1	SET 4	20Nm
15	BEARING COVER SPACER	2	SET 4	
16	TAPER NUT	1	SET 4	
17	WASHER	1	SET 4	
18	SCREW BOLT M6X25	1	SET 4	12Nm
19	MOTOR COVER - CENTER	1	099.25041	
20	MOTOR COVER - LEFT	1	099.25042	
21	MOTOR COVER - RIGHT	1	099.25043	
22	SCREW BOLT M5X10	5	099.12100	2Nm
23	SCREW BOLT M6X10	2		2Nm
24	SCREW BOLT M4X10	4	099.13020	2Nm
25	SCREW BOLT M4X16	1		2Nm
26	LOWER SHOCK SCREW	1	SET 2 / 099.25038	10Nm
27	FLIP CHIP LEFT (PLAIN HOLE)	1	099.25039	
28	FLIP CHIP RIGHT (THREADED)	1	099.25040	
29	CHAINSTAY SMALL PROTECTOR	1	099.25044	
30	CHAINSTAY PROTECTOR	1	099.25016	
31	CABLE PLUG	1	989.13010	

ITEM No.	DESCRIPTION	QTY.	PART NUMBER	TORQUE
32	BRAKE CALIPER ADAPTOR	1	SET 6	
33	SCREW BOLT M6X15	2	SET 6	12Nm
34	BATTERY COVER	1	Refer to B2B web for color options	
35	BATTERY LOCK BRACKET	1	099.25082	
36	BATTERY HOLD FRONT	1	099.25049	
37	BATTERY HOLD BRACKET REAR 800WH	1	099.25050	
	BATTERY HOLD BRACKET REAR 600WH	1	099.25085	
38	SCREW BOLT M4X6	10	099.25052	2Nm
39	BATTERY RELEASE SCREW	1	099.25051	12Nm
40	SCREW BOLT M5X15	6	099.15002 & SET 5	4,5Nm/2Nm
41	HEADTUBE CABLE PLUG	2	SET 7	
42	SCREW BOLT M3X10	2	SET 7	2Nm
43	SHOCK FENDER	1	099.25045	
44	REAR TRIANGLE SHOCK FENDER	1	099.25046	
45	SCREW BOLT M3X10	2	099.12116	2Nm
46	CHAINGUIDE	1	SET 5	
47	HANGER	1	SRAM UDH	
48	CHARGE PORT COVER	1	099.25099	
49	SCREW BOLT M3X5	1	099.25028	2Nm
50	WATER BOTTLE PLATE NUT	2	099.25074	
51	WATER BOTTLE PLATE	1	099.25072	
52	DOWN TUBE PROTECTOR	1	099.25053	
53	LINK SPACER	1	SET 4	
54	SCREW BOLT M2.5X5	2	SET 7	1Nm
55	SCREW BOLT M5x8	1	SET 5	2Nm
56	CHIANGUIDE INNER PLATE	1	SET 5	
57	WASHER 5X9X1	4	SET 5	
58	HEX NUT M6	1	099.25084	
59	C RING FOR BATTERY LOCK BRACKET	1	099.25083	
60	REAR AXLE	1	112.90027	

DETAIL 01

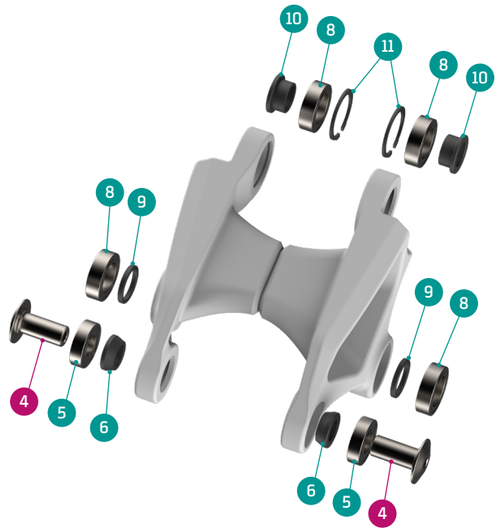

DETAIL 02

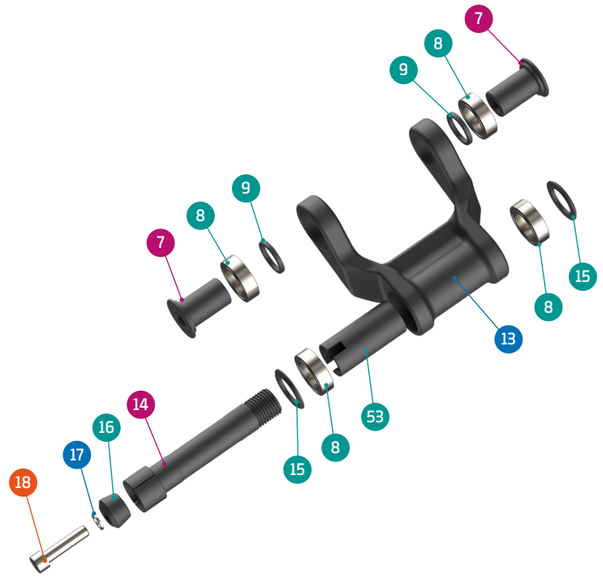

FOAM FOR BATTERY (600WH)

FOAM FOR MAIN TUBE

FOAM FOR BATTERY COVER

SET 7

CABLE GUIDE KIT

SET 1

ZERO BEARING KIT 26

SET 2

SHOCK HARDWARE KIT 21

SET 3

UPPER LINK KIT 30

SET 4

LOWER LINK KIT 37

SET 5

CHAIN GUIDE PLATE + BOLTS

PART NUMBER	DESCRIPTION	COMPONENTS
099.22101	**SET 1:** ZERO BEARING KIT 26	BEARING 3802-2RS, 24x15x7 (x8) / BEARING 6900V-2RS, 10x22x6 (x2)
099.25200	**SET 2:** SHOCK HARDWARE KIT 21	SPACER (x2) / SHOCK BOLT (x2) / SHOCK BOLT (x1)
099.22300	**SET 3:** UPPER LINK KIT 30	SPACER, 15x19x2.5T (x2) / UPPER LINK-RT SPACER (x2) / PIVOT AXLE, M12 (x2) / PIVOT AXLE, M15 (x2) / C-RING (x6)
099.25400	**SET 4:** LOWER LINK KIT 37	SPACER, 15x27x2 (x2) / SPACER, 15x19x2.5t (x2) / INNER LOWER LINK SPACER (x1) / PIVOT AXLE, M10 (x1) / AXLE NUT, M10 (x1) / MAIN AXLE (x1) / SPACER (x1) / TAPER NUT (x1) / SCREW BOLT (x1)
099.25047	**SET 5:** CHAIN GUIDE PLATE + BOLTS	CHAIN GUIDE BASE (x1) / CHAIN GUIDE OUTER PLATE (x1) / SCREW BOLT, M5X12L (x2) / SCREW BOLT, M5x8-P (x1) / WASHER 5x9x1t (x4)
099.25018	**SET 6:** DISC ADAPTOR KIT	DISC ADAPTOR (x1) / SCREW BOLT (x2)
099.25013	**SET 7:** CABLE GUIDE KIT	CABLE GUIDE (x1) / SCREW BOTL M2.5X5L (x1) / SCREW BOLT M3X10L (x1)
099.25088	FOAM KIT FOR MAIN TUBE	
099.25089	FOAM FOR BATTERY COVER	
099.25097	FOAM FOR 600Wh BATTERY	